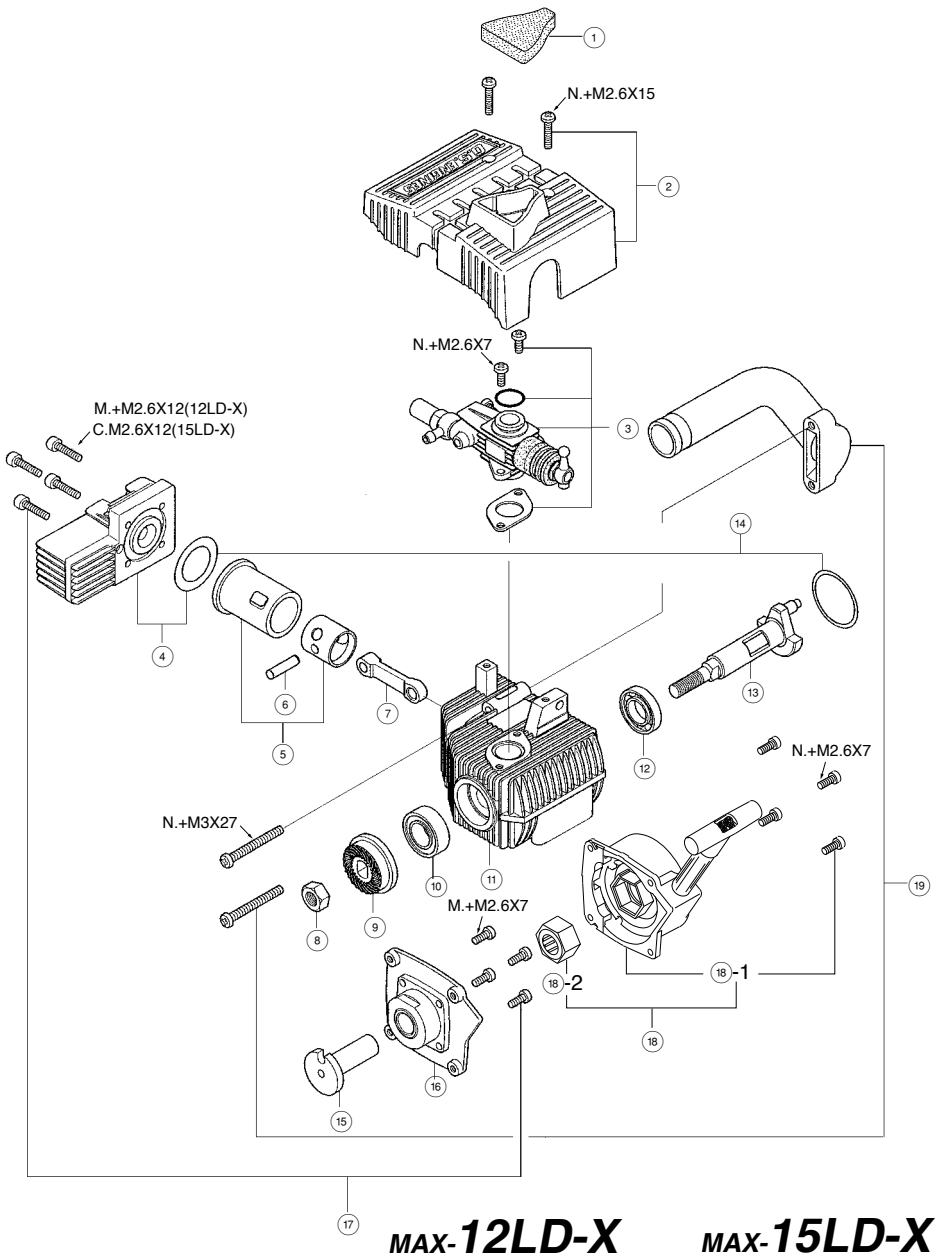

MAX-12LD-X (11180)

MAX-15LD-X (11550)

MAX-12LD-X(T) (11183) (W/E-1000 Silencer)

MAX-15LD-X(T) (11555) (W/E-1000 Silencer)

✻ Type of screw

C...Cap Screw B...Binding Head Screw
M...Oval Fillister-head Screw F...Flat Head Screw
N...Round Head Screw S...Set Screw

No.	Code No.	Description
1	7 2403 420	104 Filter Element (3pcs.)
2	7 2403 410	Engine Shield [12LD-X]
	7 2403 510	Engine Shield [15LD-X]
3	2 1183 000	Carburettor Complete (Type 10F)
4	2 1154 000	Heatsink Head [12LD-X]
	2 1554 000	Heatsink Head [15LD-X]
5	2 1203 011	Cylinder & Piston Assembly [12LD-X]
	2 1503 000	Cylinder & Piston Assembly [15LD-X]
6	2 1206 000	Piston Pin [12LD-X]
	2 1706 000	Piston Pin [15LD-X]
7	2 1205 040	Connecting Rod
8	2 0810 007	Prooeller Nut
9	2 1408 000	Drive Hub
10	2 2631 019	Crankshaft Ball Bearing (Front)
11	2 1151 000	Crankcase [12LD-X]
	2 1551 000	Crankcase [15LD-X]
12	2 1230 000	Crankshaft Ball Bearing (Rear)
13	2 1152 000	Crankshaft
14	2 1164 000	Gasket Set [12LD-X]
	2 1524 000	Gasket Set [15LD-X]
15	2 1421 200	Starting Shaft
16	2 1121 000	Rear Adaptor
17	2 1163 000	Screw Set [12LD-X]
	2 1313 030	Screw Set [15LD-X]
18	7 3003 000	No.5 Recoil Starter Assembly
18-1	7 3003 100	No.5 Recoil Starter Body
18-2	7 3003 200	No.5 One-way Clutch
19	7 2103 410	Exhaust Header Pipe
	7 1605 300	Glow Plug A3 [12LD-X]
	7 1608 001	Glow Plug No.8 [15LD-X]
	7 2404 100	Engine Mount Spacer
	2 1325 000	E-1000 Silencer [12/15LD-X(T)]
✻	7 2103 020	T-1020 Tuned Silencer
✻	7 2103 310	Super Joint Tube 15
✻	7 3300 305	Dust Cap Set ø4(For Carburettor Nipple)
✻	7 3300 712	Dust Cap Set ø7(For T-1020)
✻	7 1521 000	Long Socket Wrench

✻ Optional extra parts