TRAXXAS SUMMIT™ Rear Assembly

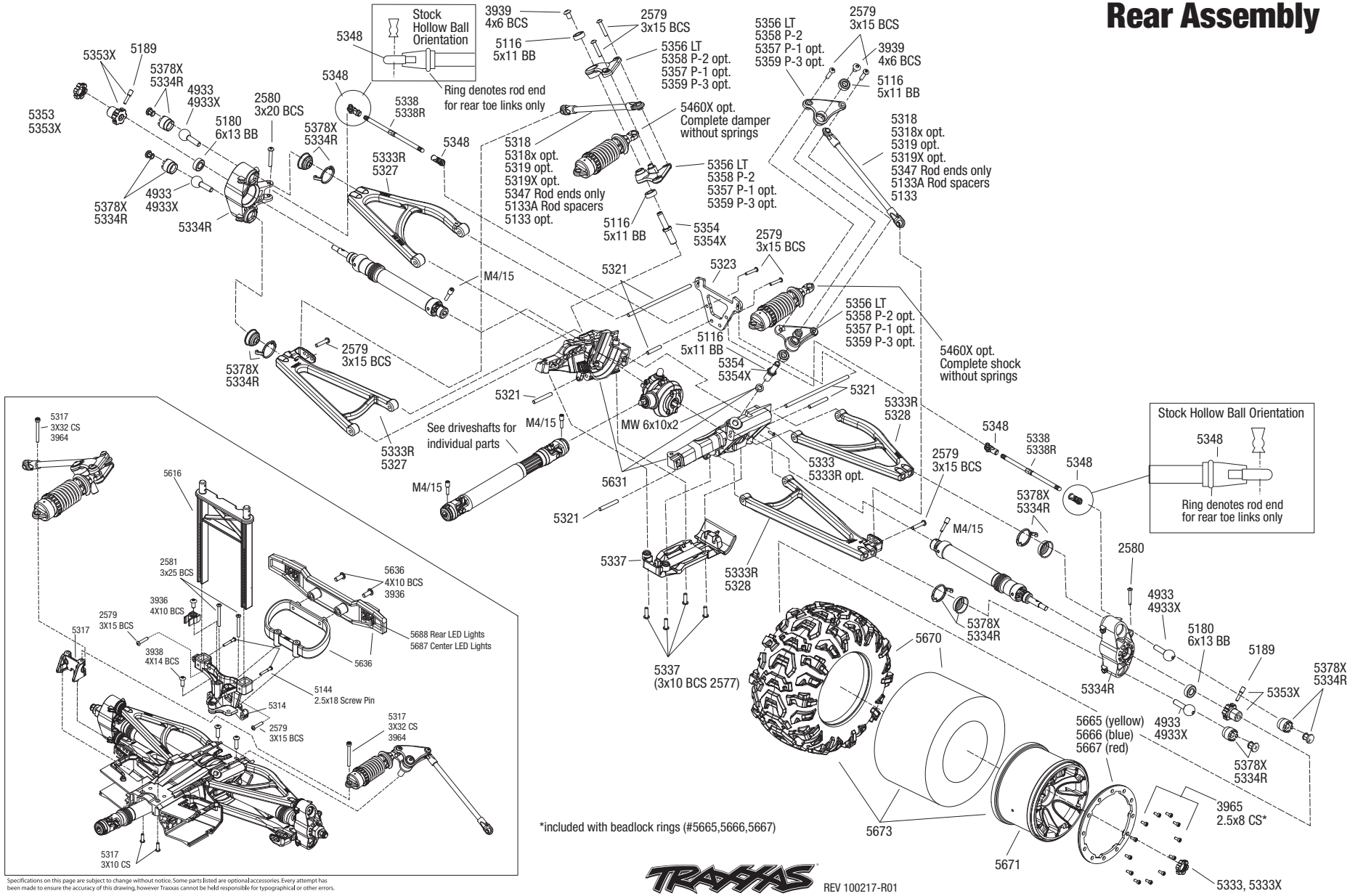

Specifications on this page are subject to change without notice. Some parts listed are optional accessories. Every attempt has been made to ensure the accuracy of this drawing, however Traxxas cannot be held responsible for typographical or other errors.

TRAXXAS REV 100217-R01